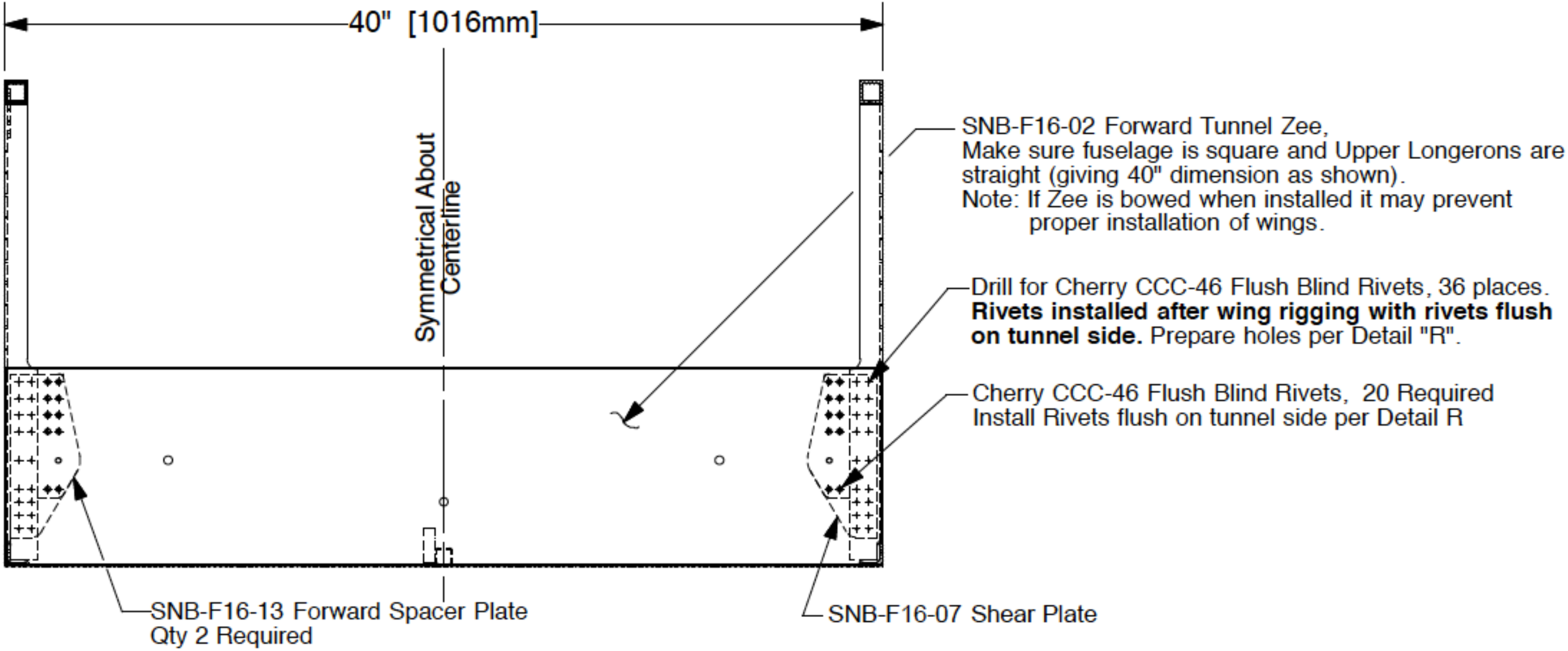

View K-K

View Looking forward at Forward Tunnel Zee

Scale: 1/8